ITEM	DESCRIPTION	DETAIL	MATERIAL	Q'TY
1	CAP CASTING	SNZ307	GRADE200	1
2	BASE CASTING	SNZ307	GRADE200	1
3	HEX.HEAD BOLT	M10×1.5P×50LG	AISI-1010	2
4	LOCK WASHER	M10	AISI-1045	2
5	DOWEL PIN	Ø4×12LG	AISI-1045	2
6	GREASE NIPPLE	PT 1/8	AISI-1010	1
7	METAL PLUG	PT 1/8	AISI-1010	1

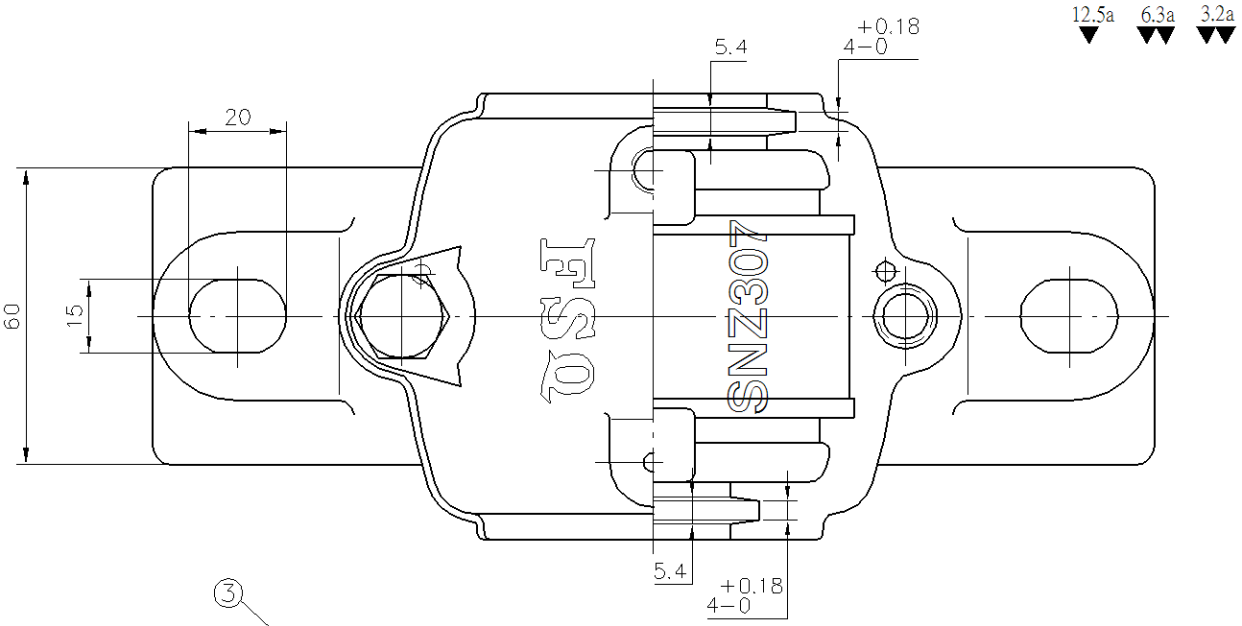

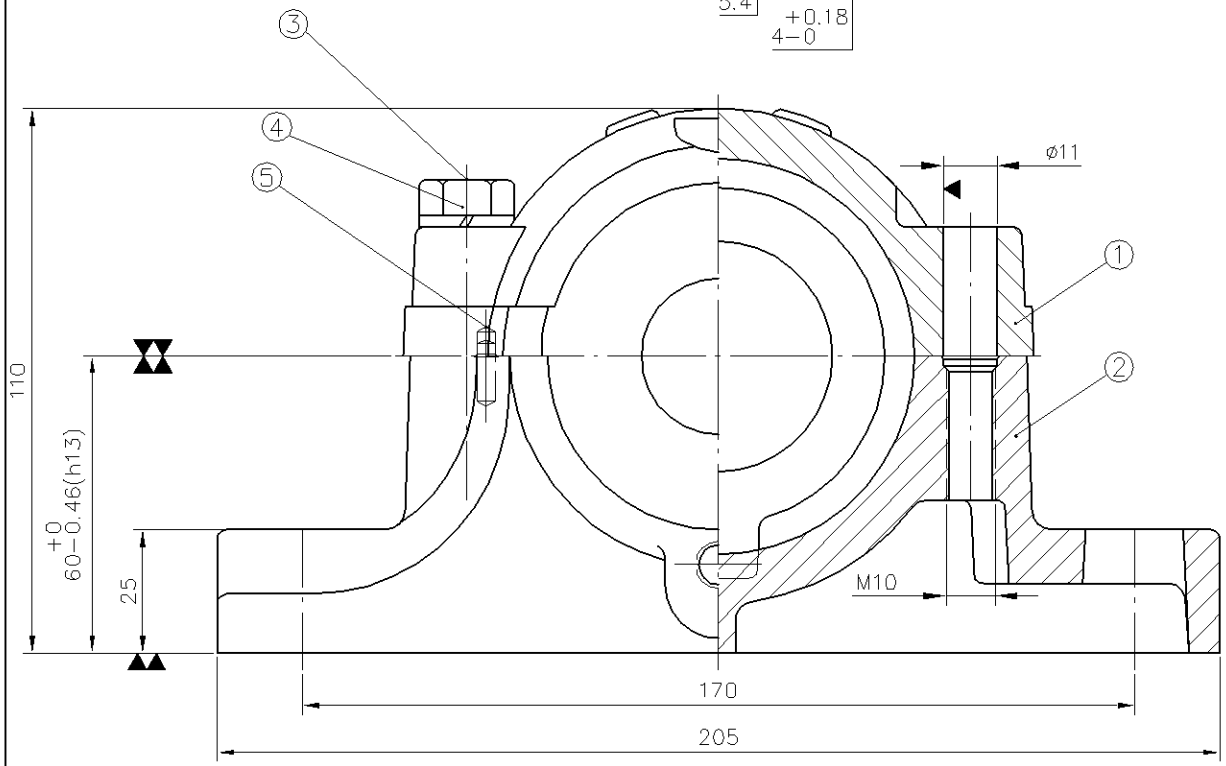

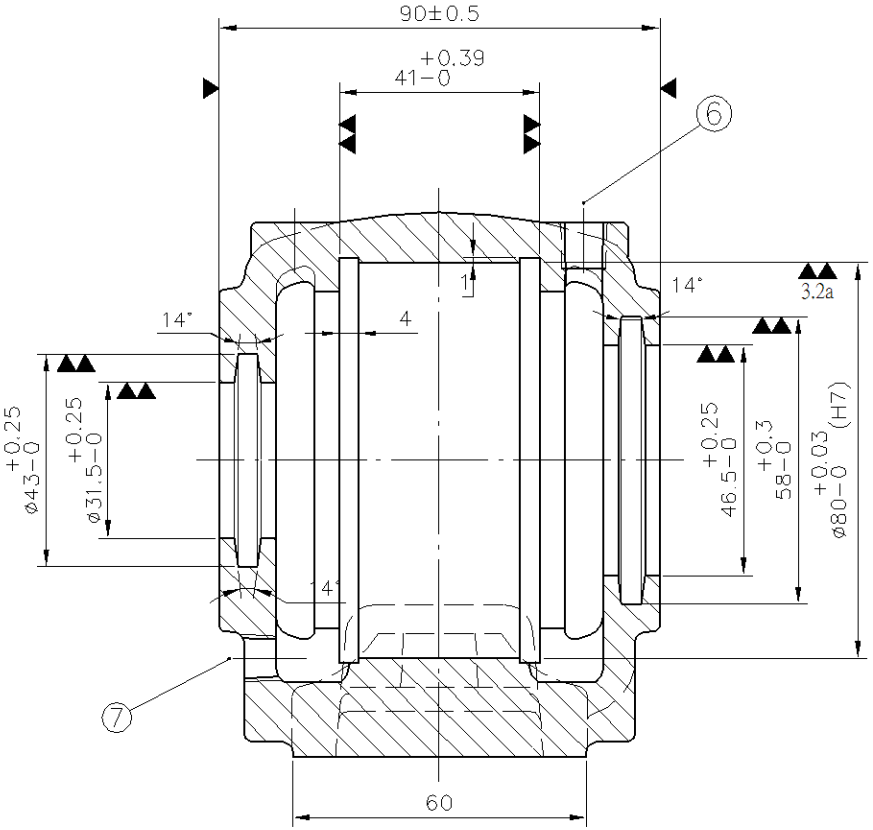

FAIR FRIEND ENT. GROUP.

	NAME	DATE
DRAWN	H.S.Y	2010/11/22
CHECKED	K.Y.S	2010/11/22
SCALE		Issue

FSQ
FAIRSKQ (TAIWAN) CO., LTD.

DRAWING NAME	DRAWING NO	EDITION
SNZ307	PB37307D	00

CAD NO MANUAL CHANGES

REV.MARK	CAREER	NAME	DATE

敬　告　RESTRICTED
此圖乃友迦工業(股)公司財產,未經本公司正式授權,不得私自影印或將內容透漏與第三者。
THIS DRAWING IS PROPERTY OF FAIRSKQ (TAIWAN) CO., LTD. AND IS TRANSMITTED TO YOU AS A CONFIDENTIAL DISCLOSURE. IT SHALL NOT BE COPIED OR IT'S CONTENTS REVEALED TO OUTSIDE PARTIES WITHOUT WRITTEN CONSENT OF FAIRSKQ (TAIWAN) CO., LTD.